www.koolance.com

Specifications Sheet

Generated: 2026-11-20

P/N: RP-450X2

RP-450X2 Dual 5.25in Reservoir for 1-2 PMP-450/S Pumps



Building parallel loops with Koolance's highest flow pumps just got easier! RP-450X2 is a dual 5.25" bay reservoir designed for **one or two** Koolance PMP-450 or PMP-450S pumps (not included).

Machined from a solid piece of acetal for maximum reliability, the RP-450X2 has a thick acrylic window and front aluminum bezel. Two sets of G 1/4 BSPP (parallel) thread inlet and outlets appear on the back, designated "P1" and "P2" for each pump. If one pump is used, an acetal blocker is included to occupy the second pump location.

There are four pre-drilled holes for optional 3mm LEDs around the acrylic window. CD bay mounting screws are included. Capacity = approx. 10 fl oz (300ml). Weight without pumps = 2.5 lbs (1.1kg). Total dimensions = 5.8" (14.8cm) W x 5.4" (13.6cm) L x 3.3" (8.5cm) H.

General	
Weight	2.50 lb (1.13 kg)
Reservoirs	
Capacity	300mL (10 fl oz)

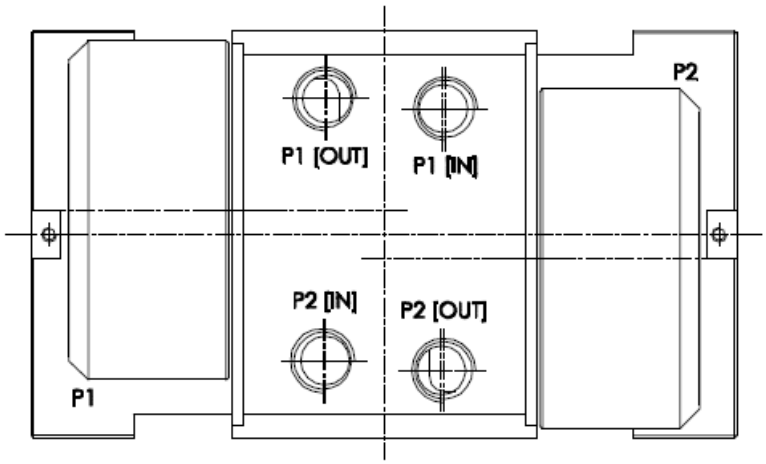

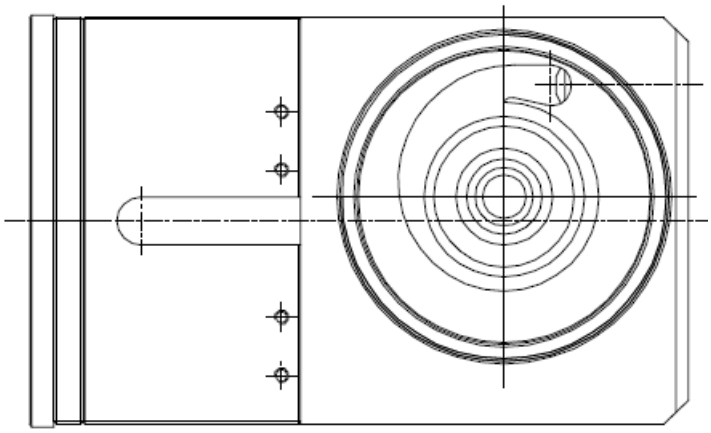

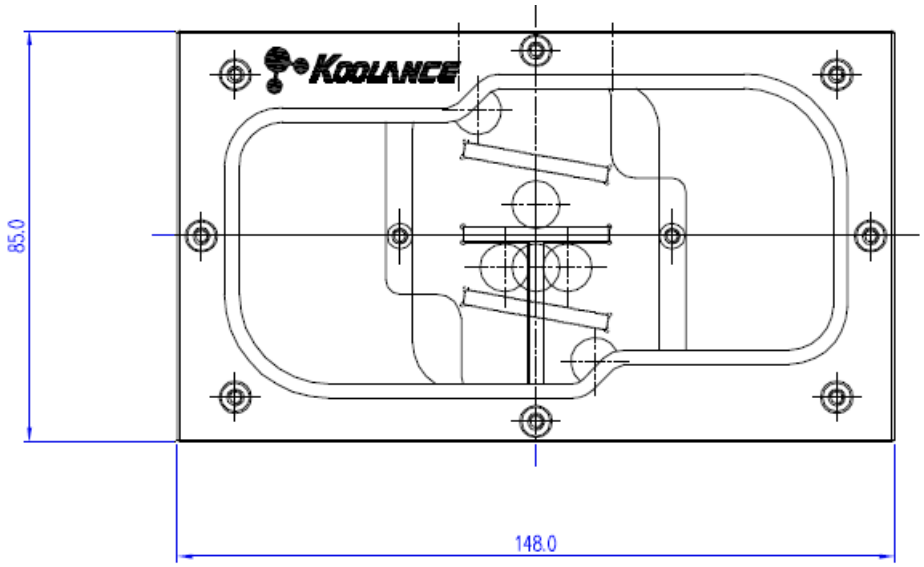
KOOLANCE
85.0
148.0

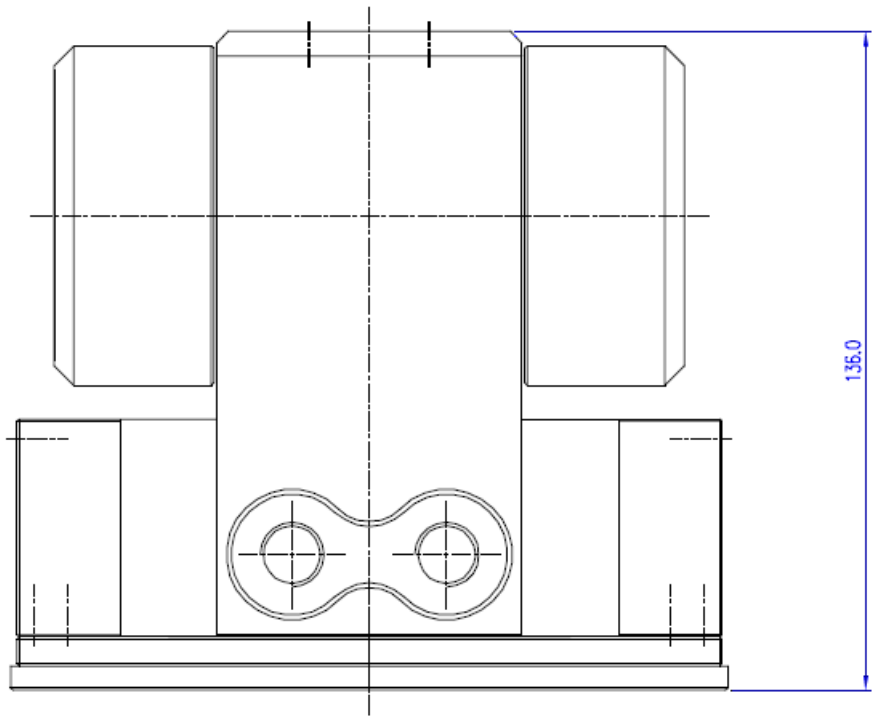
136.0

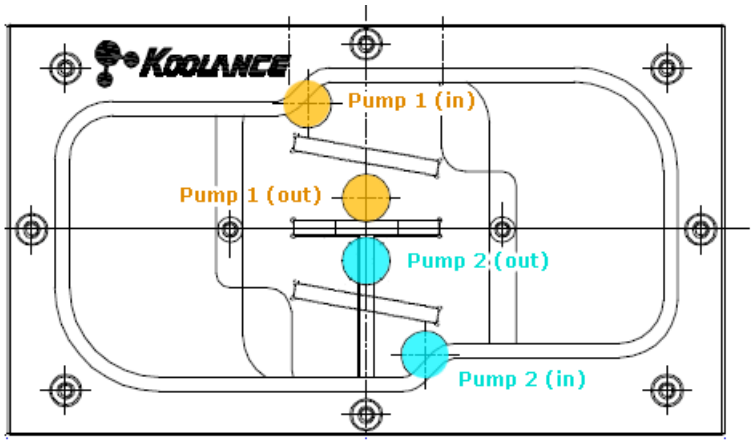
KOOLANCE
Pump 1 (in)
Pump 1 (out)
Pump 2 (out)
Pump 2 (in)

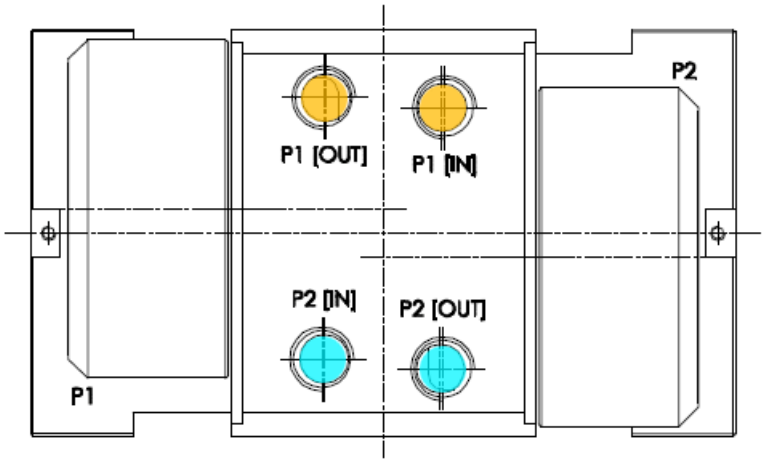
P1 [OUT]
P1 [IN]
P2
P2 [IN]
P2 [OUT]
P1