www.koolance.com

Specifications Sheet

Generated: 2026-11-18

P/N: ADT-G14M-N14F-SS

Thread Adapter, G 1/4 Male to NPT 1/4 Female, Stainless Steel



Thread adapter from G 1/4 BSPP (male) to NPT 1/4 (female).

General	
Weight	0.09 lb (0.04 kg)
Fitting Thread	G 1/4 BSPP, NPT 1/4
Max Pressure Tolerance @ 25°C	15kgf/cm2 (213.4psi)
Max Temperature Tolerance	120°C (248°F)
Wetted Materials	SUS 316, EPDM

File

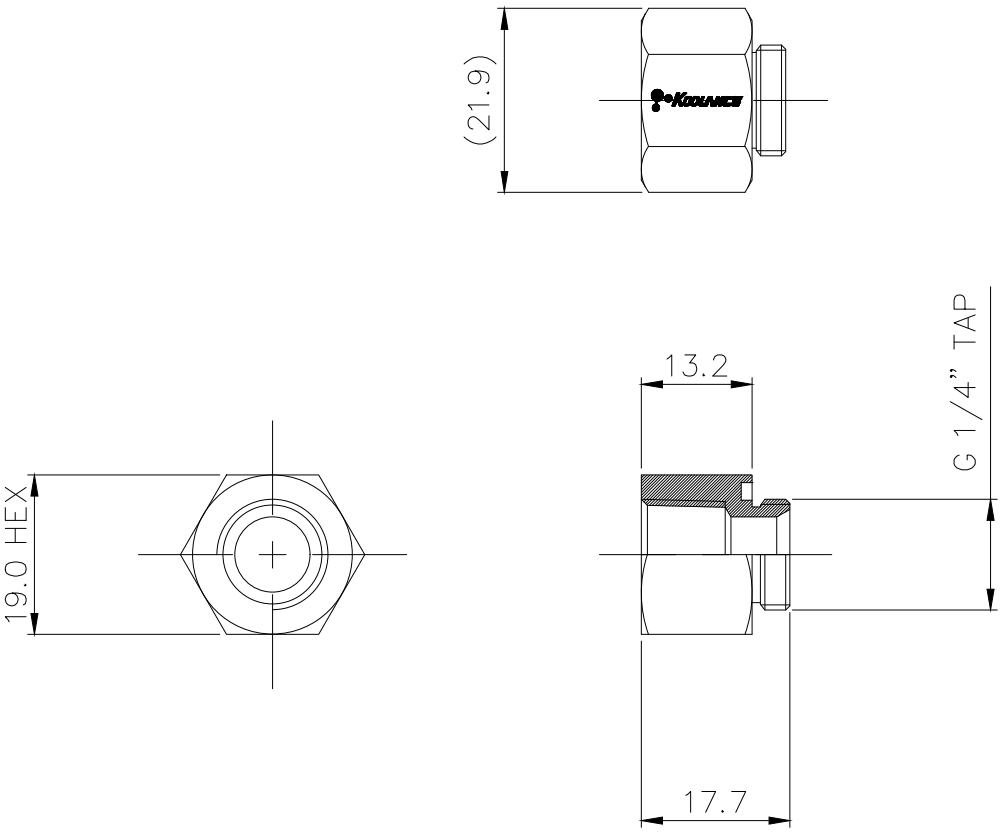

NO.	DESCRIPTION				MATER'L		QUANTITY	REMARKS
KOOLANCE					UNIT	MM	APPAR ADT-G14M-N14F-SS	
	BY	BY	BY	APPRD BY	SCALE	N/S	TITLE Ass'y	
DATE					3RD ANGLE			
05/13/2024	S.J.LEE				CODE NO.		DWG. NO.	