www.koolance.com

Specifications Sheet

Generated: 2024-04-24

P/N: ADT-G4FG8M

Threading Adapter, G 3/8 Male to G 1/4 Female

Single fitting threading adapter, from G 3/8 BSPP (male) to G 1/4 BSPP (female).

General	
Weight	0.40 lb (0.18 kg)
Fitting Thread	G 1/4 BSPP, G 3/8 BSPP
Max Pressure Tolerance @ 25°C	15kgf/cm2 (213.4psi)
Max Temperature Tolerance	120°C (248°F)
Wetted Materials	Brass, Nickel Plating, EPDM

File

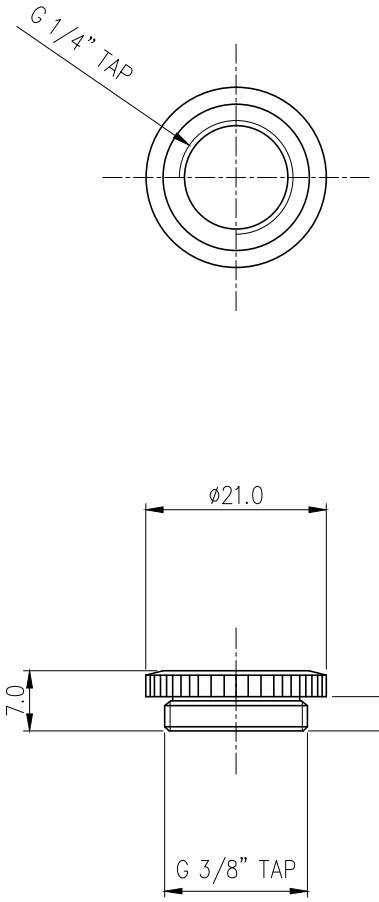

NO.	DESCRIPTION	MATER'L	QUANTITY	REMARKS
KOOLANCE		UNIT MM	APPAR ADT-G4FG8M	
	BY BY BY APPRD BY	SCALE N/S	TITLE Ass'y	
DATE		3RD ANGLE		
04/06/2017	S.J.LEE	CODE NO.	DWG. NO.	