www.koolance.com

Specifications Sheet

Generated: 2026-11-19

P/N: HOS-10CL-3M

Tubing, PVC Clear, Dia: 10mm x 13mm (3/8in x 1/2in) - [Length 3m / 9.8ft]



Koolance clear PVC tubing with 10mm (3/8in) internal diameter, 13mm (1/2in) external diameter. Length 3m / 9.8ft. Bend radius is approximately 37mm (1.5in).

General	
Weight	0.60 lb (0.27 kg)
Max Pressure Tolerance @ 25°C	5kgf/cm2 (71psi)
Max Temperature Tolerance	70°C (158°F)
Hardness (Shore)	80A

File

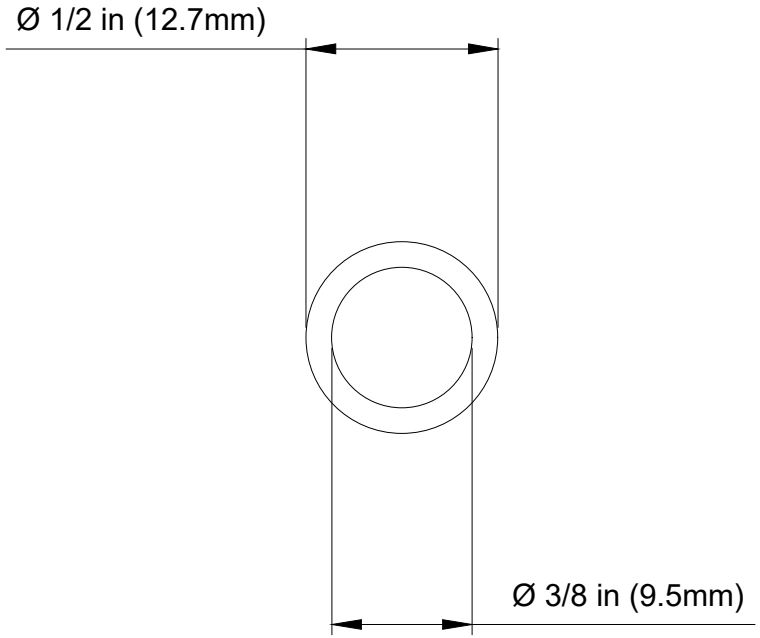

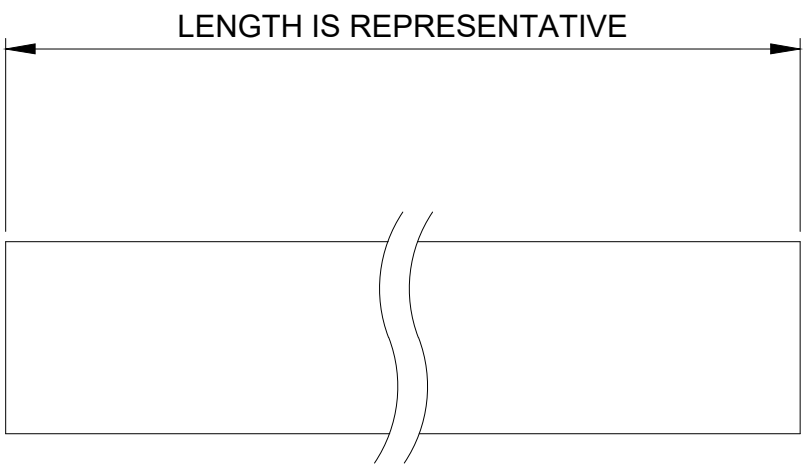

Clear PVC

NO.	DESCRIPTION				MATER'L	QUANTITY	REMARKS
KOOLANCE					UNIT inch	APPAR	
	BY	BY	BY	APPRD BY	SCALE N/S	TITLE HOS-10CL-XX	
DATE					3RD ANGLE		
2026.05.11	SK.An				CODE NO.	DWG. NO.	